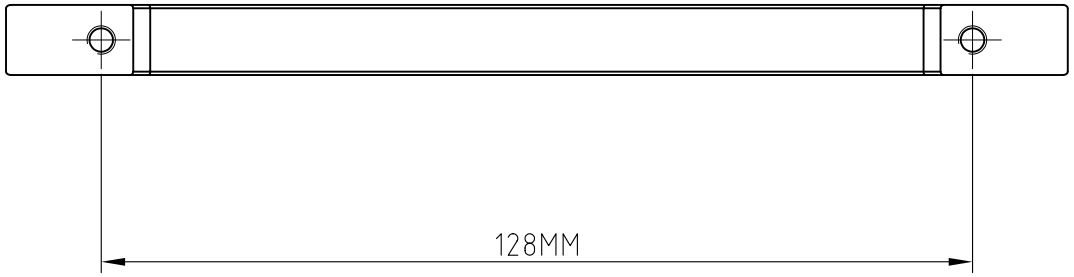


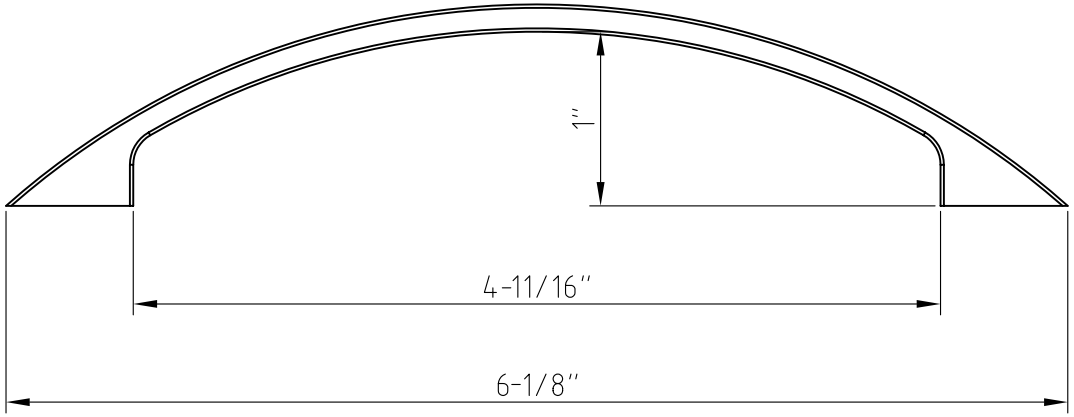


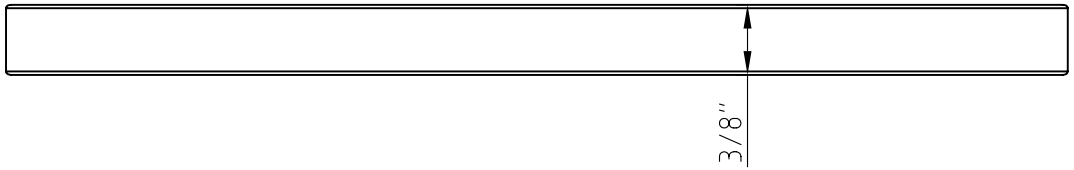


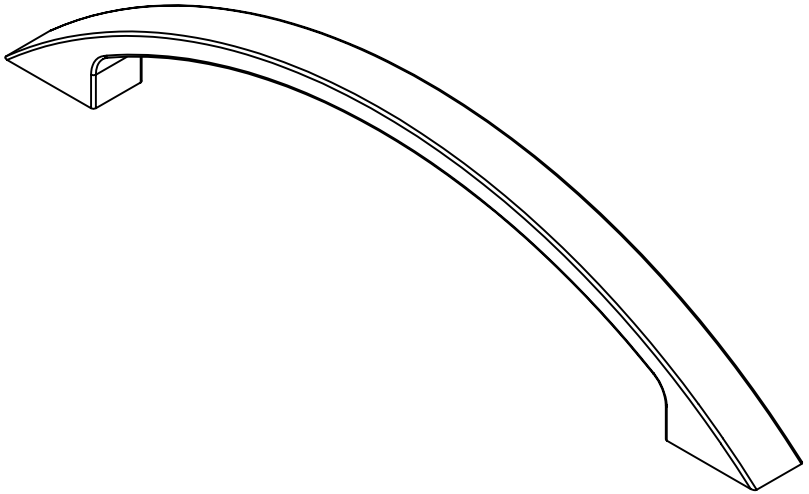

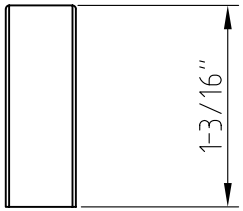


| | | | |
|---|---|---|---|
| MyKnobs.com | ITEM#: 81065 | MATERIAL: Zinc | |
| | FINISH: DBAC/PC/SN | WEIGHT: g | |
| | | PROJECTION: | |
| PROPRIETARY AND CONFIDENTIAL<br>THE INFORMATION CONTAINED IN THIS DRAWING IS THE SOLE PROPERTY OF HARDWARE RESOURCES INC. ANY REPRODUCTION IN PART OR AS A WHOLE WITHOUT THE WRITTEN PERMISSION OF HARDWARE RESOURCES INC. IS PROHIBITED. | TOLERANCE UNLESS OTHERWISE SPECIFIED:<br>X. : MM ±0.20<br>X.X: MM ±0.10<br>X.XX: MM ±0.05<br>ANGULAR: ±0.5°<br>DO NOT SCALE DRAWING | UNIT: | DRAWN BY: alan.liu | DATE: |
| | | SIZE: | CHECKED BY: | DATE: |
| | | | APPROVED BY: | DATE: |