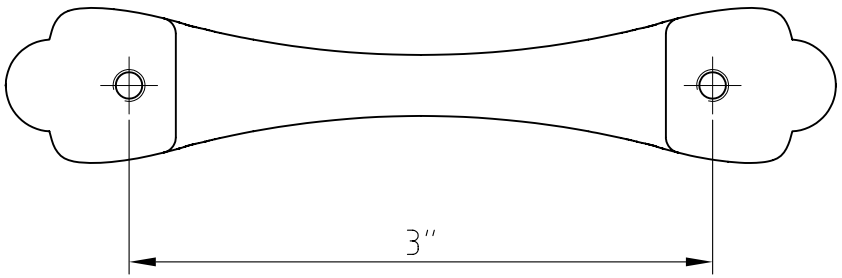

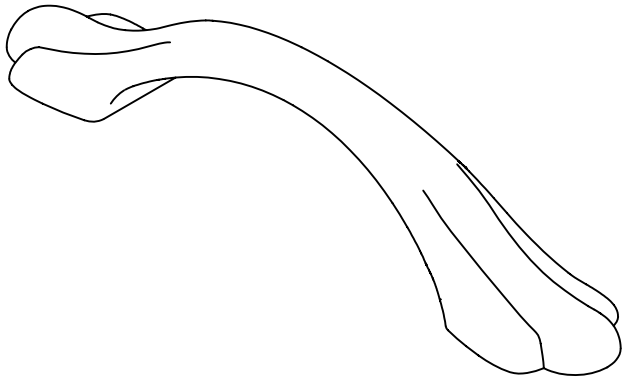

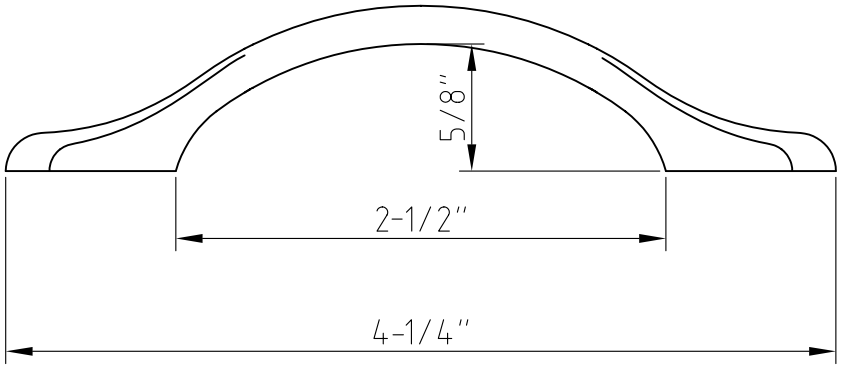

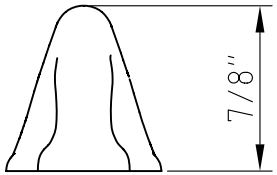

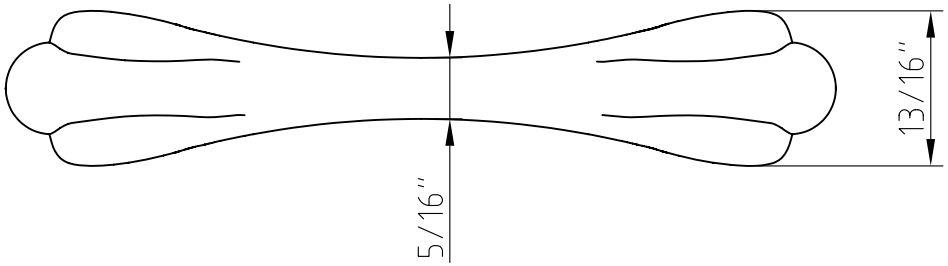

MyKnobs.com	ITEM#: 3208	MATERIAL: Zinc	
	FINISH: AB/DBAC/DACM/SN	WEIGHT: g	
		PROJECTION:	

PROPRIETARY AND CONFIDENTIAL
THE INFORMATION CONTAINED IN THIS DRAWING IS THE SOLE PROPERTY OF HARDWARE RESOURCES INC. ANY REPRODUCTION IN PART OR AS A WHOLE WITHOUT THE WRITTEN PERMISSION OF HARDWARE RESOURCES INC. IS PROHIBITED.

TOLERANCE UNLESS OTHERWISE SPECIFIED: X.: MM ±0.20 X.X: MM ±0.10 X.XX: MM ±0.05 ANGULAR: ±0.5° DO NOT SCALE DRAWING	UNIT:	DRAWN BY: alan.liu	DATE:
	SIZE:	CHECKED BY:	DATE:
		APPOROVED BY:	DATE: