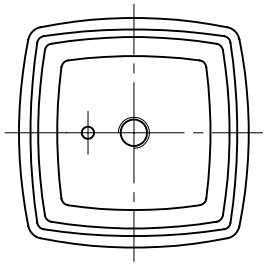

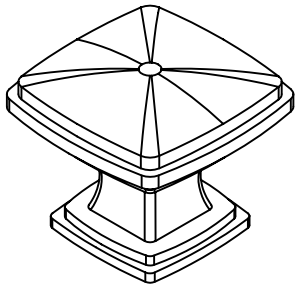

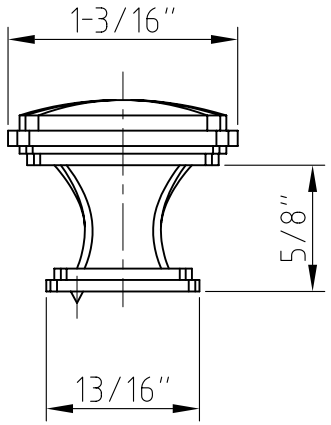

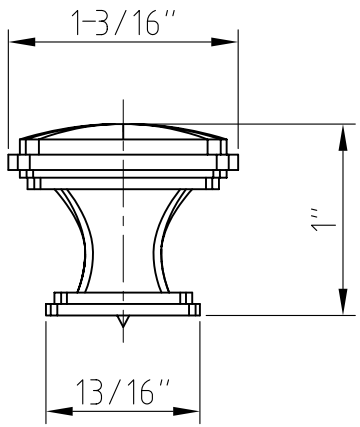

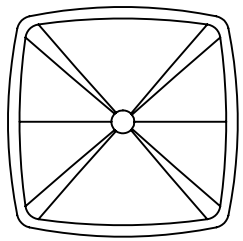

MyKnobs.com	ITEM#: 1091		MATERIAL: Zinc	
	FINISH:		WEIGHT: g	
			PROJECTION:	
PROPRIETARY AND CONFIDENTIAL THE INFORMATION CONTAINED IN THIS DRAWING IS THE SOLE PROPERTY OF HARDWARE RESOURCES INC. ANY REPRODUCTION IN PART OR AS A WHOLE WITHOUT THE WRITTEN PERMISSION OF HARDWARE RESOURCES INC. IS PROHIBITED.	TOLERANCE UNLESS OTHERWISE SPECIFIED: X. : MM ±0.20 X.X: MM ±0.10 X.XX: MM ±0.05 ANGULAR: ±0.5° DO NOT SCALE DRAWING	UNIT:	DRAWN BY: alan.liu	DATE:
		SIZE:	CHECKED BY:	DATE:
			APPOROVED BY:	DATE: