Builder Resources

Vanity Top Specifications

VTOP3CM267-2210

40” x 24” x 3 cm.

Materials: Solid Granite

To be used with Column Vanities (VAN002, VAN006, VAN007)

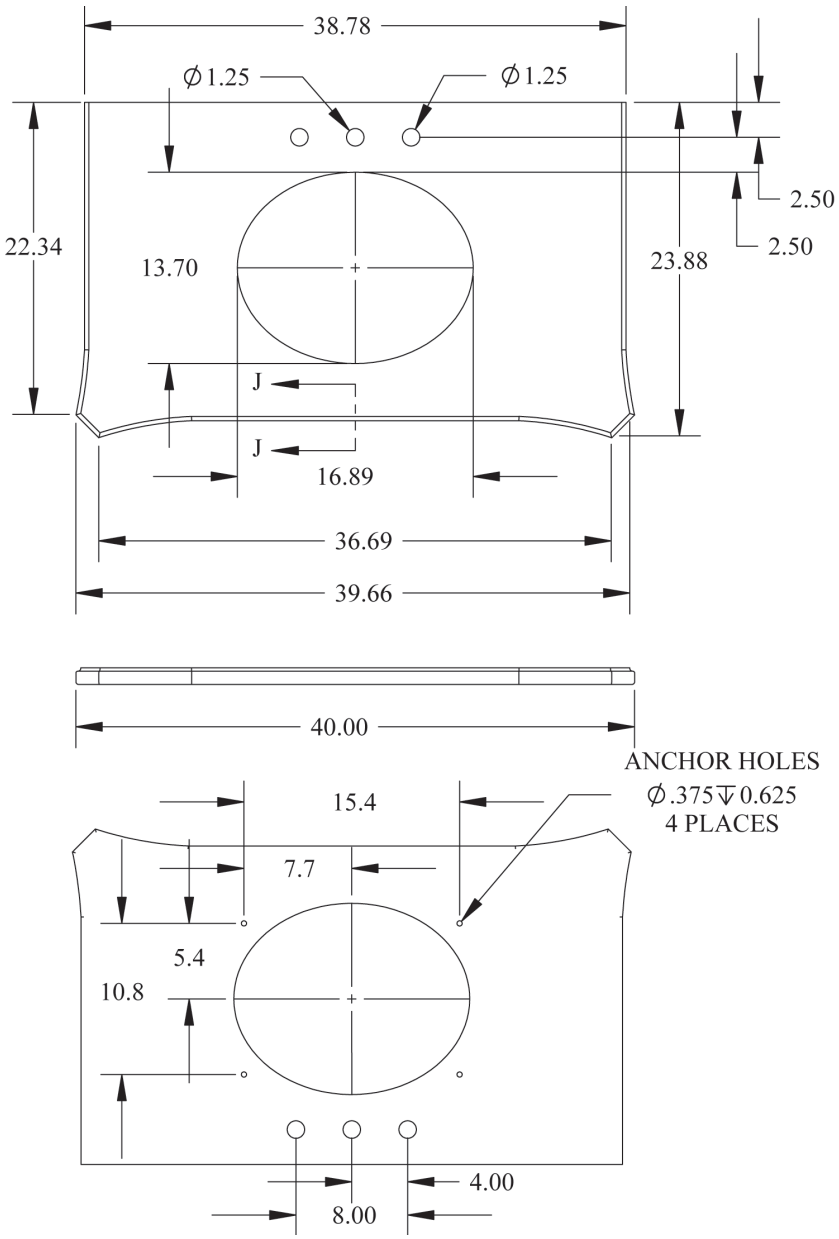

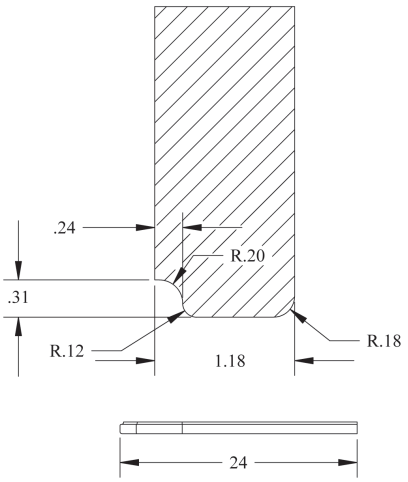

www.cabinetknob.com