Builder Resources

Vanity Top Specifications

VTOP3CM15-2209

40” x 22” x 3 cm.

Materials: Solid Granite

To be used with French Country Vanity (VAN015)

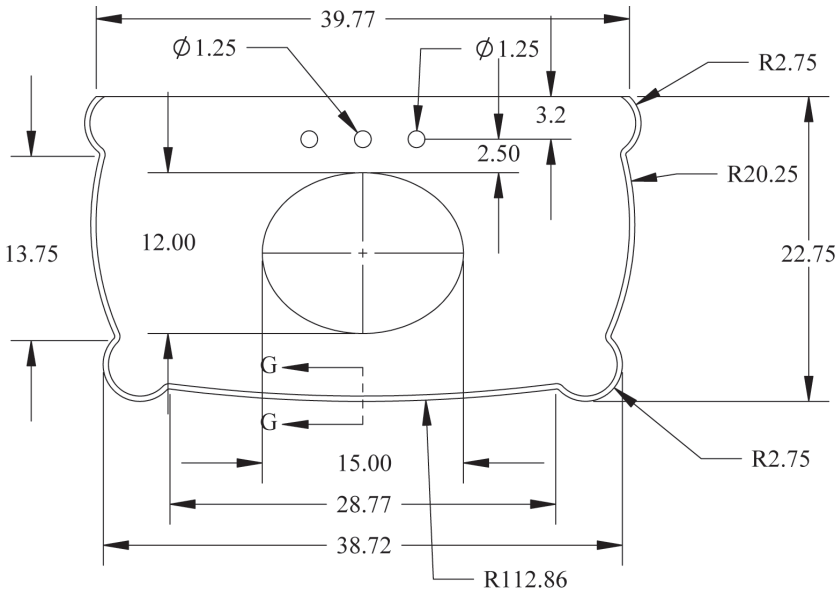

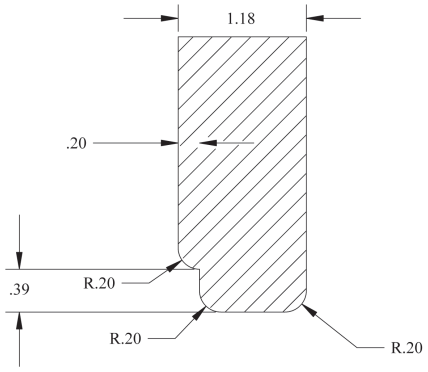

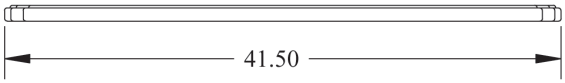

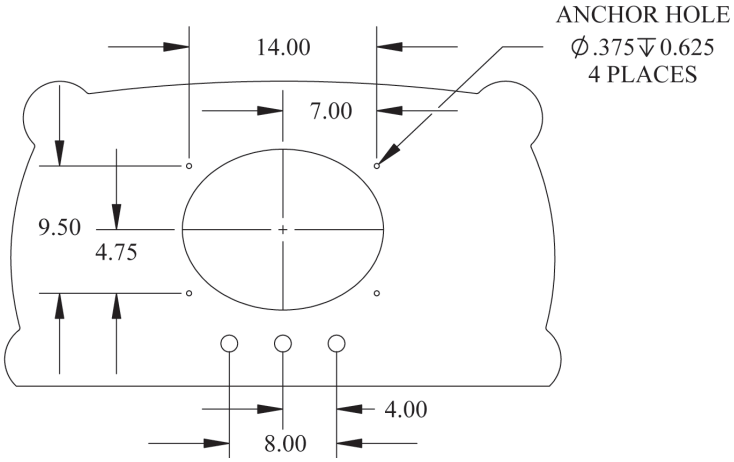

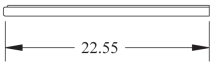

www.cabinetknob.com